EVALUATION REPORT

FLORIDA BUILDING CODE, 8TH EDITION (2023)

Issued December 15, 2025

Manufacturer: TRI COUNTY METALS
301 SE 16th Street
Trenton, FL 32693
(877) 766-3309
www.tricountymetals.com

Manufacturing Locations: Trenton, FL

Quality Assurance: PRI Construction Materials Technologies (QUA9110)

SCOPE

Category: Roofing
Subcategory: Metal Roofing
Code Edition: Florida Building Code, 8th Edition (2023) High-Velocity Hurricane Zones (HVHZ)
Code Sections: 1518.9.1, 1523.1.1, 1523.6.5, 1523.6.5.2.4, 1523.6.5.2.4.1
Properties: Wind Resistance

REFERENCES

Entity	Report No.	Standard	Year
PRI Construction Materials Technologies (TST5878)	945T0002	ASTM B 117	2016
PRI Construction Materials Technologies (TST5878)	945T0004	ASTM G 155	2013
PRI Construction Materials Technologies (TST5878)	1272T0002	ASTM B 117	2016
		TAS 110	2000
PRI Construction Materials Technologies (TST5878)	1272T0003	ASTM B 117	2016
		TAS 110	2000
PRI Construction Materials Technologies (TST5878)	1272T0005	ASTM G 155	2013
		TAS 110	2000
PRI Construction Materials Technologies (TST5878)	1272T0006	ASTM G 155	2013
		TAS 110	2000
PRI Construction Materials Technologies (TST5878)	1930T0001	TAS 125	2003
		UL 580	2006
		UL 1897	2015
PRI Construction Materials Technologies (TST5878)	1930T0002	TAS 125	2003
		UL 580	2006
		UL 1897	2015
PRI Construction Materials Technologies (TST5878)	1930T0003	TAS 125	2003
		UL 580	2006
		UL 1897	2015
PRI Construction Materials Technologies (TST5878)	1930T0004	TAS 125	2003
		UL 580	2006
		UL 1897	2015
PRI Construction Materials Technologies (TST5878)	1930T0005	TAS 100	1995
PRI Construction Materials Technologies (TST5878)	1930T0006	TAS 100	1995
PRI Construction Materials Technologies (TST5878)	1930T0007	TAS 100	1995
PRI Construction Materials Technologies (TST5878)	1930T0008	TAS 100	1995
PRI Construction Materials Technologies (TST5878)	1930T0010	ASTM B 117	2016
		TAS 110	2000
PRI Construction Materials Technologies (TST5878)	1930T0011	ASTM G 155	2013
		TAS 110	2000
PRI Construction Materials Technologies (TST5878)	1930T0013	TAS 125	2003
		UL 580	2006
		UL 1897	2015
PRI Construction Materials Technologies (TST5878)	1930T0016	TAS 125	2003
		UL 580	2006
		UL 1897	2015

This evaluation report is provided for State of Florida product approval under Rule 61G20-3. The manufacturer shall notify CREEK Technical Services, LLC of any product changes or quality assurance changes throughout the duration for which this report is valid. This evaluation report does not express nor imply warranty, installation, recommended use, or other product attributes that are not specifically addressed herein.

Entity	Report No.	Standard	Year
PRI Construction Materials Technologies (TST5878)	1930T0018	TAS 125	2003
		UL 580	2006
		UL 1897	2015
PRI Construction Materials Technologies (TST5878)	1930T0020	TAS 125	2003
		UL 580	2006
		UL 1897	2015
PRI Construction Materials Technologies (TST5878)	1930T0022	TAS 100	2023
PRI Construction Materials Technologies (TST5878)	1930T0024	TAS 100	2023
PRI Construction Materials Technologies (TST5878)	1930T0025	TAS 100	2023
PRI Construction Materials Technologies (TST5878)	1930T0026	TAS 125	2003
		UL 580	2006
		UL 1897	2015
PRI Construction Materials Technologies (TST5878)	1930T0027	TAS 125	2003
		UL 580	2006
		UL 1897	2015
PRI Construction Materials Technologies (TST5878)	1930T0028	ASTM C 794	2001
PRI Construction Materials Technologies (TST5878)	1930T0029	TAS 125	2003
		UL 580	2006
		UL 1897	2015
PRI Construction Materials Technologies (TST5878)	1930T0031	TAS 125	2003
		UL 580	2006
		UL 1897	2015
PRI Construction Materials Technologies (TST5878)	1930T0032	TAS 125	2003
		UL 580	2006
		UL 1897	2015
PRI Construction Materials Technologies (TST5878)	1930T0034.1	TAS 125	2003
		UL 580	2006
		UL 1897	2015
PRI Construction Materials Technologies (TST5878)	1930T0036.1	TAS 125	2003
		UL 580	2006
		UL 1897	2015
PRI Construction Materials Technologies (TST5878)	1930T0037.1	TAS 125	2003
		UL 580	2006
		UL 1897	2015
PRI Construction Materials Technologies (TST5878)	1930T0038	TAS 125	2003
		UL 580	2006
		UL 1897	2015
PRI Construction Materials Technologies (TST5878)	1930T0039.2	TAS 125	2003
		UL 580	2006
		UL 1897	2015
PRI Construction Materials Technologies (TST5878)	1930T0041	TAS 100	2023
PRI Construction Materials Technologies (TST5878)	1930T0040	TAS 125	2003
		UL 580	2006
		UL 1897	2015
PRI Construction Materials Technologies (TST5878)	1930T0043	TAS 100	2023
PRI Construction Materials Technologies (TST5878)	1930T0046	TAS 125	2003
		UL 580	2006
		UL 1897	2015

This evaluation report is provided for State of Florida product approval under Rule 61G20-3. The manufacturer shall notify CREEK Technical Services, LLC of any product changes or quality assurance changes throughout the duration for which this report is valid. This evaluation report does not express nor imply warranty, installation, recommended use, or other product attributes that are not specifically addressed herein.

PRODUCT DESCRIPTION

TCM-LOK 1 in.	**Profile:**	1 in. snap lock seam; Max.16 in. coverage
	Description:	Non-structural, snap lock standing seam roof panel with 7/8 in. slotted nail strip
	Material:	Min. 24 ga. ASTM A653 G90, ASTM A792 AZ50 steel coated with Fluropon® or WeatherXL or ASTM A792 AZ55 steel (F_y = min. 50 ksi); or Min. 0.032 in. ASTM B209, 3105 H22 aluminum coated with Fluropon® (F_y = min. 25 ksi); Shall conform with FBC Section 1507.4.3
	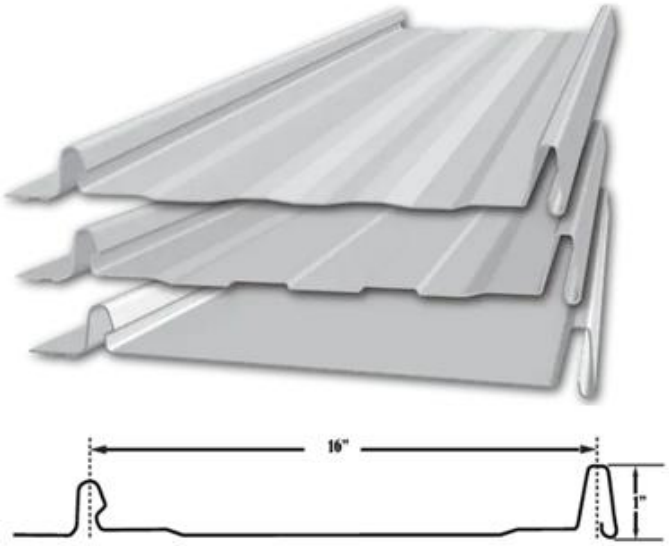	
TCM-LOK 1.5 in.	**Profile:**	1.5 in. snap lock seam; Max. 15 in. coverage
	Description:	Non-structural, snap lock standing seam roof panel with 7/8 in. slotted nail strip
	Material:	Min. 24 ga. ASTM A653 G90, ASTM A792 AZ50 steel coated with Fluropon® or WeatherXL or ASTM A792 AZ55 steel (F_y = min. 50 ksi); Shall conform with FBC Section 1507.4.3
	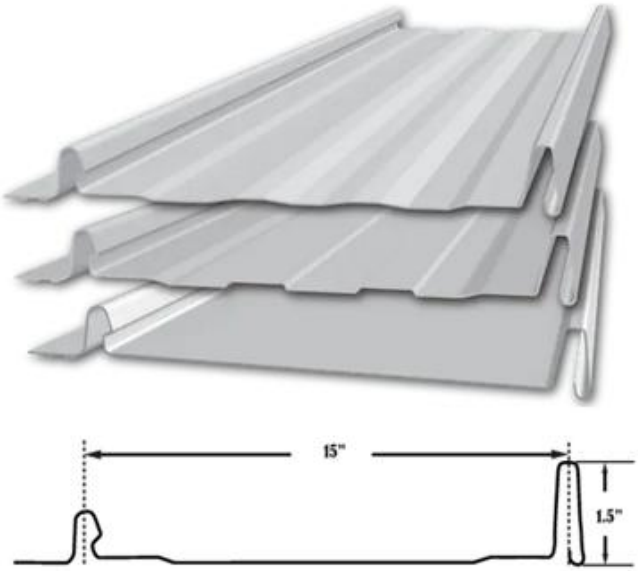	

This evaluation report is provided for State of Florida product approval under Rule 61G20-3. The manufacturer shall notify CREEK Technical Services, LLC of any product changes or quality assurance changes throughout the duration for which this report is valid. This evaluation report does not express nor imply warranty, installation, recommended use, or other product attributes that are not specifically addressed herein.

1.5 SL-LOK	**Profile:**	1.5 in. snap lock seam; Max. 15.5 in. coverage
	Description:	Non-structural, snap lock standing seam roof panel
	Material:	Min. 24 ga. ASTM A653 G90, ASTM A792 AZ50 steel coated with Fluropon® or WeatherXL or ASTM A792 AZ55 steel (F_y = min. 50 ksi) or Min. 0.032 in. ASTM B209, 3105 H24 aluminum coated with Fluropon® (F_y = min. 25 ksi); Shall conform with FBC Section 1507.4.3

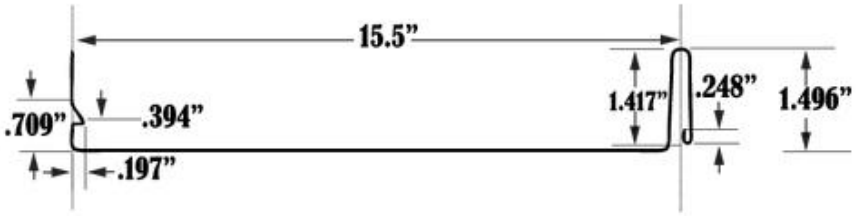

1.75 SS-LOK	**Profile:**	1.75 in. snap lock standing seam; Max. 18 in. coverage
	Description:	Non-structural, snap lock standing seam roof panel
	Material:	Min. 24 ga. ASTM A653 G90, ASTM A792 AZ50 steel coated with Fluropon® or WeatherXL or ASTM A792 AZ55 steel (F_y = min. 50 ksi); Min. 0.040 in. ASTM B209, 3104 H22 aluminum coated with Fluropon® (F_y = min. 25 ksi); Shall conform with FBC Section 1507.4.3

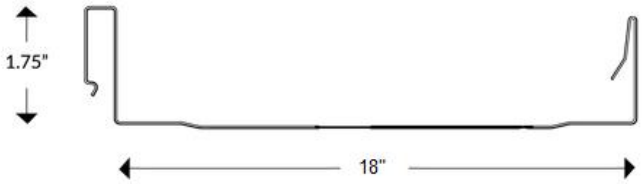

This evaluation report is provided for State of Florida product approval under Rule 61G20-3. The manufacturer shall notify CREEK Technical Services, LLC of any product changes or quality assurance changes throughout the duration for which this report is valid. This evaluation report does not express nor imply warranty, installation, recommended use, or other product attributes that are not specifically addressed herein.

1.5 MS-LOK	**Profile:**	1.5 in. mechanical seam; Max. 16 in. coverage
	Description:	Non-structural, standing seam roof panel; 180° double lock mechanical seam
	Material:	Min. 24 ga. ASTM A653 G90, ASTM A792 AZ50 steel coated with Fluropon® or WeatherXL or ASTM A792 AZ55 steel (F_y = min. 50 ksi); Shall conform with FBC Section 1507.4.3

2 MS-LOK	**Profile:**	2 in. mechanical seam; Max. 18.75 in. coverage
	Description:	Non-structural, through fastened roof panel
	Material:	Min. 24 ga. ASTM A653 G90, ASTM A792 AZ50 steel coated with Fluropon® or WeatherXL or ASTM A792 AZ55 steel (F_y = min. 50 ksi); Shall conform with FBC Section 1507.4.3

This evaluation report is provided for State of Florida product approval under Rule 61G20-3. The manufacturer shall notify CREEK Technical Services, LLC of any product changes or quality assurance changes throughout the duration for which this report is valid. This evaluation report does not express nor imply warranty, installation, recommended use, or other product attributes that are not specifically addressed herein.

5V	**Profile:**	3/8 in. ribs at 12 in. o.c.; 24 in. coverage
	Description:	Non-structural, through fastened roof panel
	Material:	Min. 26 ga. ASTM A653 G90, ASTM A792 AZ50 steel coated with Fluropon® or WeatherXL or ASTM A792 AZ55 steel (F_y = min. 50 or 80 ksi); or Min. 0.032 in. ASTM B209, 3105 H22 aluminum coated with Fluropon® (F_y = min. 27 ksi); Shall conform with FBC Section 1507.4.3
	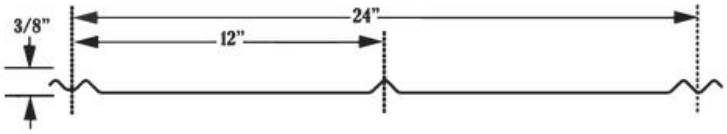	
PBR	**Profile:**	1-1/4 in. ribs at 12 in. o.c.; 36 in. coverage
	Description:	Non-structural, through fastened roof panel
	Material:	Min. 26 ga. ASTM A653 G90, ASTM A792 AZ50 steel coated with Fluropon® or WeatherXL or ASTM A792 AZ55 steel (F_y = min. 80 ksi); Shall conform with FBC Section 1507.4.3
	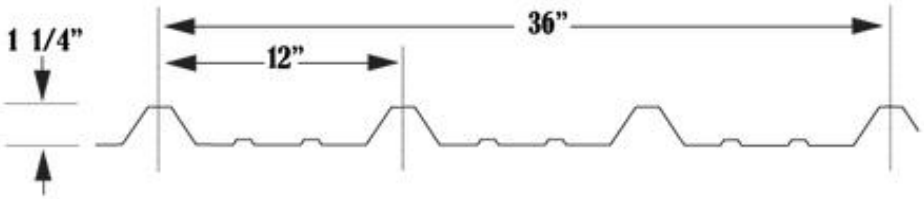	

This evaluation report is provided for State of Florida product approval under Rule 61G20-3. The manufacturer shall notify CREEK Technical Services, LLC of any product changes or quality assurance changes throughout the duration for which this report is valid. This evaluation report does not express nor imply warranty, installation, recommended use, or other product attributes that are not specifically addressed herein.

Ultra Rib	**Profile:**	3/4 in. ribs at 9 in. o.c.; 36 in. coverage
	Description:	Non-structural, through fastened roof panel
	Material:	Min. 26 ga. ASTM A653 G90, ASTM A792 AZ50 steel coated with Fluropon® or WeatherXL or ASTM A792 AZ55 steel (F_y = min. 50 ksi); Shall conform with FBC Section 1507.4.3

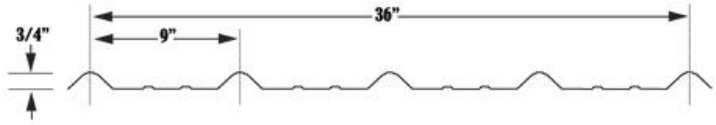

This evaluation report is provided for State of Florida product approval under Rule 61G20-3. The manufacturer shall notify CREEK Technical Services, LLC of any product changes or quality assurance changes throughout the duration for which this report is valid. This evaluation report does not express nor imply warranty, installation, recommended use, or other product attributes that are not specifically addressed herein.

LIMITATIONS

1. Fire classification is not within the scope of this evaluation.
2. The roof deck and the roof deck attachment information are provided based on testing. FBC requirements for the rational design of the roof deck, including the attachment, are not within the scope of this evaluation.
3. Roof slope shall be 2:12 or greater.
4. Reroofing shall be in accordance with Section 1521.
5. Installation of the evaluated products shall comply with this report, RAS 133, and the manufacturer's published application instructions. Where discrepancies exist between these sources, the more restrictive and FBC compliant installation detail shall prevail.
6. All products listed in this report shall be manufactured under a quality assurance program in compliance with Rule 61G20-3.

COMPLIANCE STATEMENT

This report has been prepared in accordance with F.A.C. Rule 61G20-3.

This item has been digitally signed and sealed by Zachary R. Priest, PE, on 12/15/2025.

Printed copies of this document are not considered signed and sealed and the signature must be verified on any electronic copies.

Digitally signed by Zachary R. Priest
2025.12.15 09:48:18 -05'00'

Zachary R. Priest, P.E.
Florida Registration No. 74021
Organization No. ANE9641

CERTIFICATION OF INDEPENDENCE

CREEK Technical Services, LLC does not have, nor will it acquire, a financial interest in any company manufacturing or distributing products under this evaluation.

CREEK Technical Services, LLC is not owned, operated, or controlled by any company manufacturing or distributing products under this evaluation.

Zachary R. Priest, P.E. does not have, nor will acquire, a financial interest in any company manufacturing or distributing products under this evaluation.

Zachary R. Priest, P.E. does not have, nor will acquire, a financial interest in any other entity involved in the approval process of the product.

APPENDICES

1) APPENDIX A – Installation (3 pages)
2) APPENDIX B – Approved Roof Systems (7 pages)
3) APPENDIX C – Design Wind Loads (3 pages)

This evaluation report is provided for State of Florida product approval under Rule 61G20-3. The manufacturer shall notify CREEK Technical Services, LLC of any product changes or quality assurance changes throughout the duration for which this report is valid. This evaluation report does not express nor imply warranty, installation, recommended use, or other product attributes that are not specifically addressed herein.

INSTALLATION

Note - Refer to the ***APPROVED ROOF SYSTEMS*** *section of this report for specific installation details of a selected system.*

Unless otherwise specified in this report the following installation details shall be met for the named products:

Component	Product	Installation Detail
Fasteners	#10-12 Pancake Type A screw	Shall penetrate through the sheathing a minimum 3/8 in. Shall be corrosion resistant in accordance with FBC section 1507.4.4 and 1517.6.1.
	#10-9 PanclipSS MTW low profile head wood screw	
	#10-9 Panclip MTW low profile head wood screw	
	#9-15 Woodgrip HWH wood screw with sealing washer	
	#9-15 Evergrip HWH wood screw with sealing washer	
	#12-8 Woodgrip XG HWH wood screw with sealing washer	
	#14 PANCLIP SD-L low profile head self-drilling screw	Shall penetrate through the sheathing a minimum 3/8 in. Shall be corrosion resistant in accordance with FBC section 1507.4.4 and 1517.6.1.
Bearing Plate	Universal Bearing Plate	4" x 5", 20ga. galvanized steel bearing plate from Direct Metals, Inc.
Clips	1.5 in. DM SL Clip	24 ga. Direct Metals Inc Snaplock HD 450HD Clip, 1-1/4" – 1-1/2" Utility Snaplock Clip, 1.3 in. tall with 3 in, base 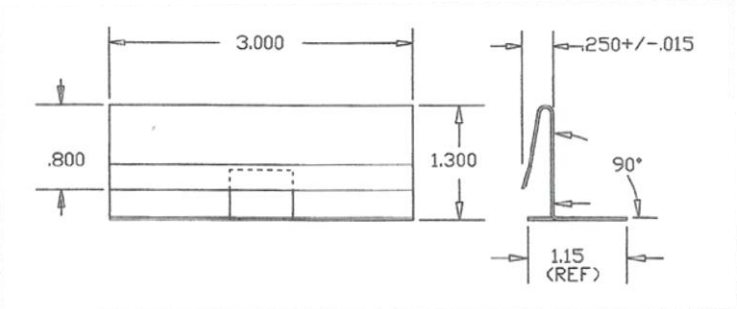
	1.5 in. SL Continuous Clip	24 ga. ASTM A792 AZ55 or 0.032" ASTM B209, 3105 H24 Al; , 1.24 in. tall with 1.1 in, base, Min. 10 ft. length 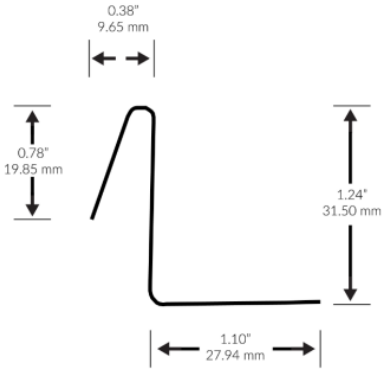

This evaluation report is provided for State of Florida product approval under Rule 61G20-3. The manufacturer shall notify CREEK Technical Services, LLC of any product changes or quality assurance changes throughout the duration for which this report is valid. This evaluation report does not express nor imply warranty, installation, recommended use, or other product attributes that are not specifically addressed herein.

Component	Product	Installation Detail
Clips – Cont'd	1.75 in. SFS SL Clip	18 ga. SFS 1-3/4 in. Snap Lock Clip; 1.875 in. tall with 3.75 in. base 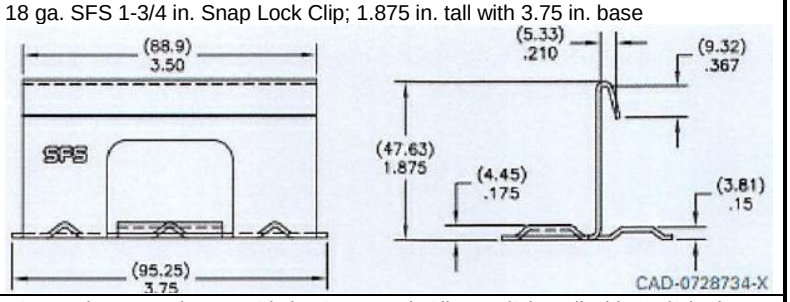
	1.75 in. DM SL Clip	18 ga. Direct Metals Inc 1-3/4 in. Snap Lock Clip; 1-7/8 in. tall with 3-1/2 in. base 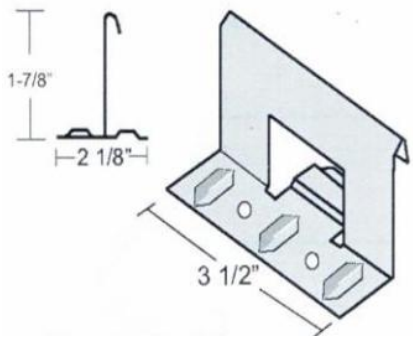
	1.5 in. ML Clip	1-1/2 in. 1-piece expansion clip; 22 ga.vertical tab; 16 ga. base; 4.5 in. long 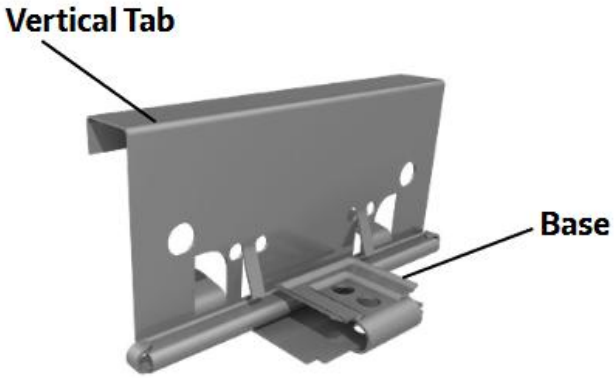
	2 in. ML Clip	2 in. 1-piece expansion clip; 22 ga.vertical tab; 16 ga. base; 4.5 in. long 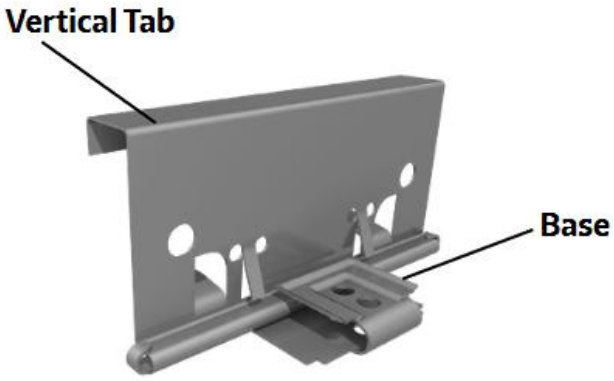

This evaluation report is provided for State of Florida product approval under Rule 61G20-3. The manufacturer shall notify CREEK Technical Services, LLC of any product changes or quality assurance changes throughout the duration for which this report is valid. This evaluation report does not express nor imply warranty, installation, recommended use, or other product attributes that are not specifically addressed herein.

Component	Product	Installation Detail
Seam Sealant	TiteBond Weathermaster Metal Roof Sealant	Shall be applied in 1/4 in.- 5/16 in. continuous beads on the male rib along the seam
	Novaflex Metal Roof Sealant	

Fastening Details	
Nomenclature	Attachment
TCM-LOK	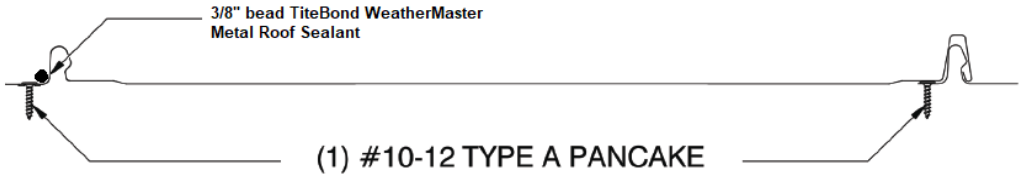
5V	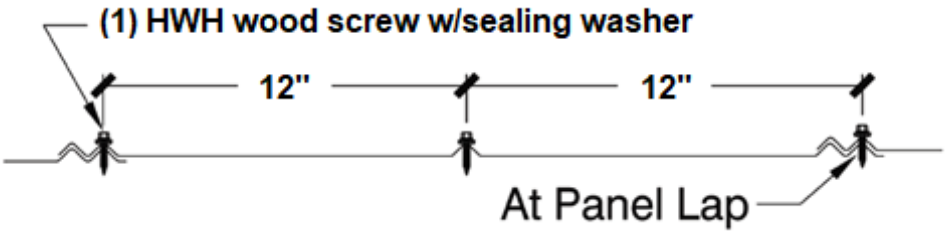
PBR	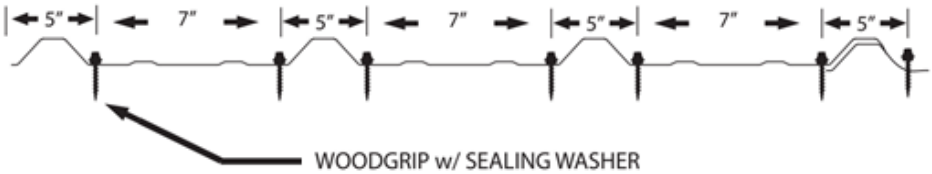
Ultra Rib	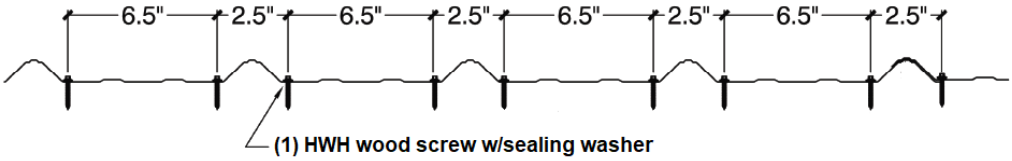

This evaluation report is provided for State of Florida product approval under Rule 61G20-3. The manufacturer shall notify CREEK Technical Services, LLC of any product changes or quality assurance changes throughout the duration for which this report is valid. This evaluation report does not express nor imply warranty, installation, recommended use, or other product attributes that are not specifically addressed herein.

APPROVED ROOF SYSTEMS

The following notes shall be observed when using the assembly tables below.

1. Maximum Design Pressure (*MDP*) was calculated using a 2:1 margin of safety per FBC Section 1523.4.
2. Refer to **LIMITATIONS** and sections of this evaluation when using the table(s) below.
3. Refer to **INSTALLATION** section of this report for installation detail when the information is not explicitly stated for the selected assembly.
4. The on-center (o.c.) spacing given is the maximum allowable attachment spacing for the rated system.
5. Underlayment shall be installed in accordance with FBC requirements. The minimum underlayment shall be ASTM D 226, Type II installed as described in FBC Section 1518.2.1 with nails and tin caps per 1517.5.
6. Unless otherwise specified, Steel Deck shall be designed by others in accordance with FBC requirements and shall be minimum 22 ga, Wide Rib Deck (Type WR) conforming to ANSI/SDI-RD1.0 & FBC and shall be attached to structural supports spaced 5ft o.c. In no case shall the attachment be less than #12-24 HWH screws at each flute with deck side laps stitched 24" o.c. with 1⁄4"-14 x 7/8" HWH screws. Panel seams shall be installed perpendicular to the steel deck ribs.
7. Wood Deck shall be designed by others in accordance with FBC requirements and shall be minimum 19/32 in. thick APA Span-Rated plywood sheathing or wood plank at maximum 24 in. span for new construction. Existing construction shall be the minimum plywood sheathing or wood plank thickness at maximum 24 in. span as stated in the approval tables on following pages. In no case shall the attachment be less than 8d ring shank nails spaced as follows:
    a. 6 in. o.c.
    b. 4 in. o.c.

Roof System Numbers and Definitions	
L1-Al-W-#	Min. 0.032 Al TCM-LOK 1 in. over Wood Deck (New or Existing)
L1-S-W-#	Min. 24ga. steel TCM-LOK 1 in. over Wood Deck (New or Existing)
L1.5-S-W-#	Min. 24ga. steel TCM-LOK 1.5 in. over Wood Deck (New or Existing)
SL-Al-W-#	Min. 0.032 Al 1.5 SL-LOK over Wood Deck (New or Existing)
SL-S-W-#	Min. 24ga. steel 1.5 SL-LOK over Wood Deck (New or Existing)
SS-Al-W-#	Min. 0.040 Al 1.75 SS-LOK over Wood Deck (New or Existing)
SS-S-W-#	Min. 24ga. steel 1.75 SS-LOK over Wood Deck (New or Existing)
1.5MS-W-#	Min. 24ga. steel 1.5 MS-LOK over Wood Deck (New or Existing)
2MS-W-#	Min. 24ga. steel 2 MS-LOK over Wood Deck (New or Existing)
2MS-S-#	Min. 24ga. steel 2 MS-LOK over Steel Deck (New or Existing)
5V-Al-W-#	Min. 0.032 Al 5V over Wood Deck (New or Existing)
5V-S-W-#	Min. 26ga. steel 5V over Wood Deck (New or Existing)
PBR-W-#	Min. 26ga. steel PBR over Wood Deck (New or Existing)
RIB-W-#	Min. 26ga. steel Ultra Rib over Wood Deck (New or Existing)

This evaluation report is provided for State of Florida product approval under Rule 61G20-3. The manufacturer shall notify CREEK Technical Services, LLC of any product changes or quality assurance changes throughout the duration for which this report is valid. This evaluation report does not express nor imply warranty, installation, recommended use, or other product attributes that are not specifically addressed herein.

Approved Systems for Min. 0.032 Al TCM-LOK 1 in. over Wood Deck (New or Existing)						
System No.	Deck	Fire Barrier	Underlayment	Roof Panel	Panel Attachment	*MDP* (psf)
L1-Al-W-1	Min. 15/32 CDX plywood (Note 7a)	OPTIONAL *Approved* fire barrier	As required per FBC	Min. 0.032 Al TCM-LOK 1 in. Max. 16 in. coverage	*TCM-LOK* attachment with #10-12 Pancake Type A screws spaced 5-1/4 in. o.c. Seam Sealant (see **INSTALLATION** for list of allowable products) applied to male rib.	**-110**

Approved Systems for Min. 24ga. steel TCM-LOK 1 in. over Wood Deck (New or Existing)						
System No.	Deck	Fire Barrier	Underlayment	Roof Panel	Panel Attachment	*MDP* (psf)
L1-S-W-1	Min. 15/32 CDX plywood (Note 7a)	OPTIONAL *Approved* fire barrier	As required per FBC	Min. 24ga. steel TCM-LOK 1 in. Max. 16 in. coverage	*TCM-LOK* attachment with #10-12 Pancake Type A screws spaced 5-1/4 in. o.c. Seam Sealant (see **INSTALLATION** for list of allowable products) applied to male rib.	**-142.5**

Approved Systems for Min. 24ga. steel TCM-LOK 1.5 in. over Wood Deck (New or Existing)						
System No.	Deck	Fire Barrier	Underlayment	Roof Panel	Panel Attachment	*MDP* (psf)
L1.5-S-W-1	Min. 15/32 CDX plywood (Note 7a)	OPTIONAL *Approved* fire barrier	As required per FBC	Min. 24ga. steel TCM-LOK 1.5 in. Max. 15 in. coverage	*TCM-LOK* attachment with #10-12 Pancake Type A screws spaced 5-1/4 in. o.c. Seam Sealant (see **INSTALLATION** for list of allowable products) applied to male rib.	**-122.5**

Approved Systems Min. 0.032 Al 1.5 SL-LOK over Wood Deck (New or Existing)						
System No.	Deck	Fire Barrier	Underlayment	Roof Panel	Panel Attachment	*MDP* (psf)
SL-Al-W-1	Min. 15/32 CDX plywood	OPTIONAL *Approved* fire barrier	As required per FBC	Min. 0.032 Al 1.5 SL-LOK Max. 15.5 in. coverage	0.032 Al 1.5 in. SL Continuous Clips installed over male leg and fastened 6 in. o.c. with one (1) #10-9 PanclipSS MTW low profile head wood screw; Female portion of snap-lock is then engaged over the continuous clip	**-101**

This evaluation report is provided for State of Florida product approval under Rule 61G20-3. The manufacturer shall notify CREEK Technical Services, LLC of any product changes or quality assurance changes throughout the duration for which this report is valid. This evaluation report does not express nor imply warranty, installation, recommended use, or other product attributes that are not specifically addressed herein.

Approved Systems Min. 0.032 Al 1.5 SL-LOK over Wood Deck (New or Existing)						
System No.	Deck	Fire Barrier	Underlayment	Roof Panel	Panel Attachment	*MDP* (psf)
SL-Al-W-2	Min. 15/32 CDX plywood	OPTIONAL *Approved* fire barrier	As required per FBC	Min. 0.032 Al 1.5 SL-LOK Max. 15.5 in. coverage	0.032 Al 1.5 in. SL Continuous Clips installed over male leg and fastened 6 in. o.c. with one (1) #10-9 PanclipSS MTW low profile head wood screw; 3/8 in. wide, continuous bead of NovaFlex Metal Roof Sealant is applied to backside of continuous clip; Female portion of snap-lock is then engaged over the continuous clip	**-108.5**

Approved Systems for Min. 24ga. steel 1.5 SL-LOK over Wood Deck (New or Existing)						
System No.	Deck	Fire Barrier	Underlayment	Roof Panel	Panel Attachment	*MDP* (psf)
SL-S-W-1	Min. 15/32 CDX plywood	OPTIONAL *Approved* fire barrier	As required per FBC	Min. 24ga. steel 1.5 SL-LOK Max. 15.5 in. coverage	1.5 in. SL Clips spaced 12 in. o.c. at the panel seam secured with two (2) #10-12 Pancake Type A screws per clip	**-75**
SL-S-W-2	Min. 15/32 CDX plywood	OPTIONAL *Approved* fire barrier	As required per FBC	Min. 24ga. steel 1.5 SL-LOK Max. 15.5 in. coverage	1.5 in. SL Clips spaced 6 in. o.c. at the panel seam secured with two (2) #10-12 Pancake Type A screws per clip	**-90**
SL-S-W-3	Min. 15/32 CDX plywood	OPTIONAL *Approved* fire barrier	As required per FBC	Min. 24ga. steel 1.5 SL-LOK Max. 15.5 in. coverage	24 ga. 1.5 in. SL Continuous Clips installed over male leg and fastened 6 in. o.c. with one (1) #10-12 Pancake Type A screws; Female portion of snap-lock is then engaged over the continuous clip	**-146**

Approved Systems for Min. 0.040 Al 1.75 SS-LOK over Wood Deck (New or Existing)						
System No.	Deck	Fire Barrier	Underlayment	Roof Panel	Panel Attachment	*MDP* (psf)
SS-Al-W-1	Min. 15/32 CDX plywood (Note 7a)	OPTIONAL *Approved* fire barrier	As required per FBC	Min. 0.040 Al 1.75 SS-LOK Max. 16 in. coverage	1.75 in. SFS SL Clips spaced 16 in. o.c. at the panel seam secured with two (2) #10-9 PanclipSS MTW low profile head screws per clip	**-90**
SS-Al-W-2	Min. 15/32 CDX plywood (Note 7a)	OPTIONAL *Approved* fire barrier	As required per FBC	Min. 0.040 Al 1.75 SS-LOK Max. 16 in. coverage	1.75 in. SFS SL Clips spaced 6 in. o.c. at the panel seam secured with two (2) #10-9 PanclipSS MTW low profile head screws per clip	**-120**

This evaluation report is provided for State of Florida product approval under Rule 61G20-3. The manufacturer shall notify CREEK Technical Services, LLC of any product changes or quality assurance changes throughout the duration for which this report is valid. This evaluation report does not express nor imply warranty, installation, recommended use, or other product attributes that are not specifically addressed herein.

Approved Systems for Min. 24ga. steel 1.75 SS-LOK over Wood Deck (New or Existing)						
System No.	Deck	Fire Barrier	Underlayment	Roof Panel	Panel Attachment	*MDP* (psf)
SS-S-W-1	Min. 15/32 CDX plywood (Note 7a)	OPTIONAL *Approved* fire barrier	As required per FBC	Min. 24ga. steel 1.75 SS-LOK Max. 18 in. coverage	1.75 in. DM SL Clips spaced 18 in. o.c. at the panel seam secured with two (2) #10-12 Pancake Type A screws per clip	**-105**

Approved Systems for Min. 24ga. steel 1.5 MS-LOK over Wood Deck (New or Existing)						
System No.	Deck	Fire Barrier	Underlayment	Roof Panel	Panel Attachment	*MDP* (psf)
1.5MS-W-1	Min. 15/32 CDX plywood (Note 7a)	OPTIONAL *Approved* fire barrier	As required per FBC	Min. 24ga. steel 1.5 MS-LOK Max. 16 in. coverage	1.5 in. ML Clips spaced 16 in. o.c. at the panel seam secured with two (2) #10-9 x min. 1.5 in. Panclip MTW low profile screws per clip; Panels mechanically seamed with 180° double lock	**-120**
1.5MS-W-2	Min. 15/32 CDX plywood (Note 7b)	OPTIONAL *Approved* fire barrier	As required per FBC	Min. 24ga. steel 1.5 MS-LOK Max. 16 in. coverage	1.5 in. ML Clips spaced 6 in. o.c. at the panel seam secured with two (2) #10-9 x min. 1.5 in. Panclip MTW low profile screws per clip; Panels mechanically seamed with 180° double lock	**-176**

Approved Systems for Min. 24ga. steel 2 MS-LOK over Wood Deck (New or Existing)						
System No.	Deck	Fire Barrier	Underlayment	Roof Panel	Panel Attachment	*MDP* (psf)
2MS-W-1	Min. 15/32 CDX plywood (Note 7a)	OPTIONAL *Approved* fire barrier	As required per FBC	Min. 24ga. steel 2 MS-LOK Max. 18.75 in. coverage	2 in. ML Clips spaced 16 in. o.c. at the panel seam secured with two (2) #10-9 x min. 1.5 in. Panclip MTW low profile screws per clip; Panels mechanically seamed with 180° double lock	**-116.25**
2MS-W-2	Min. 15/32 CDX plywood (Note 7a)	OPTIONAL *Approved* fire barrier	As required per FBC	Min. 24ga. steel 2 MS-LOK Max. 18.75 in. coverage	2 in. ML Clips spaced 8 in. o.c. at the panel seam secured with two (2) #10-9 x min. 1.5 in. Panclip MTW low profile screws per clip; Panels mechanically seamed with 180° double lock	**-120**
2MS-W-3	Min. 15/32 CDX plywood (Note 7b)	OPTIONAL *Approved* fire barrier	As required per FBC	Min. 24ga. steel 2 MS-LOK Max. 18 in. coverage	2 in. ML Clips spaced 6 in. o.c. at the panel seam secured with two (2) #10-9 x min. 1.5 in. Panclip MTW low profile screws per clip; Panels mechanically seamed with 180° double lock	**-153.5**

This evaluation report is provided for State of Florida product approval under Rule 61G20-3. The manufacturer shall notify CREEK Technical Services, LLC of any product changes or quality assurance changes throughout the duration for which this report is valid. This evaluation report does not express nor imply warranty, installation, recommended use, or other product attributes that are not specifically addressed herein.

Approved Systems for Min. 24ga. steel 2 MS-LOK over Steel Deck (New or Existing)							
System No.	Deck	Fire Barrier	Insulation	Underlayment	Roof Panel	Panel Attachment	*MDP* (psf)
2MS-S-1	Min. 22ga. steel deck (Note 6)	OPTIONAL *Approved* fire barrier	Min. 1-inch GAF EnergyGuard Polyiso loose laid	As required per FBC	Min. 24ga. steel 2 MS-LOK Max. 18 in. coverage	2 in. ML Clips and Universal Bearing Plates spaced 24 in. o.c. at the panel seam secured with two (2) #14 PANCLIP SD-L fasteners per clip; Panels mechanically seamed with 180° double lock	**-112.25**
2MS-S-2	Min. 22ga. steel deck (Note 6)	OPTIONAL *Approved* fire barrier	Min. 1-inch GAF EnergyGuard Polyiso loose laid	As required per FBC	Min. 24ga. steel 2 MS-LOK Max. 18 in. coverage	2 in. ML Clips and Universal Bearing Plates spaced 6 in. o.c. at the panel seam secured with two (2) #14 PANCLIP SD-L fasteners per clip; Panels mechanically seamed with 180° double lock	**-168.5**

Approved Systems for Min. 0.032 Al 5V Crimp over Wood Deck (New or Existing)						
System No.	Deck	Fire Barrier	Underlayment	Roof Panel	Panel Attachment	*MDP* (psf)
5V-Al-W-1	Min. 15/32 CDX plywood (Note 7a)	OPTIONAL *Approved* fire barrier	As required per FBC	Min. 0.032 Al 5V Crimp 24 in. coverage	*5V* attachment with #9-15 Evergrip screws with sealing washers spaced 9 in. o.c.	**-127.5**
5V-Al-W-2	Min. 15/32 CDX plywood (Note 7a)	OPTIONAL *Approved* fire barrier	As required per FBC	Min. 0.032 Al 5V Crimp 24 in. coverage	*5V* attachment with #9-15 Evergrip screws with sealing washers spaced 6 in. o.c.	**-150**

Approved Systems for Min. 26ga. steel 5V Crimp over Wood Deck (New or Existing)						
System No.	Deck	Fire Barrier	Underlayment	Roof Panel	Panel Attachment	*MDP* (psf)
5V-S-W-1	Min. 15/32 CDX plywood (Note 7a)	OPTIONAL *Approved* fire barrier	As required per FBC	Min. 26ga. steel, Grade 80 5V Crimp Max. 24 in. coverage	*5V* attachment with #12-8 Woodgrip XG screws with sealing washers spaced 16 in. o.c.	**-86.25**

This evaluation report is provided for State of Florida product approval under Rule 61G20-3. The manufacturer shall notify CREEK Technical Services, LLC of any product changes or quality assurance changes throughout the duration for which this report is valid. This evaluation report does not express nor imply warranty, installation, recommended use, or other product attributes that are not specifically addressed herein.

Approved Systems for Min. 26ga. steel 5V Crimp over Wood Deck (New or Existing)						
System No.	Deck	Fire Barrier	Underlayment	Roof Panel	Panel Attachment	*MDP* (psf)
5V-S-W-2	Min. 15/32 CDX plywood (Note 7a)	OPTIONAL *Approved* fire barrier	As required per FBC	Min. 26ga. steel, Grade 80 5V Crimp Max. 24 in. coverage	*5V* attachment with #9-15 Woodgrip or #12-8 Woodgrip XG screws with sealing washers spaced 12 in. o.c.	**-90**
5V-S-W-3	Min. 15/32 CDX plywood (Note 7a)	OPTIONAL *Approved* fire barrier	As required per FBC	Min. 26ga. steel, Grade 50 5V Crimp Max. 24 in. coverage	*5V* attachment with #12-8 Woodgrip XG screws with sealing washers spaced 12 in. o.c.	**-101.25**
5V-S-W-4	Min. 15/32 CDX plywood (Note 7a)	OPTIONAL *Approved* fire barrier	As required per FBC	Min. 26ga. steel, Grade 50 5V Crimp Max. 24 in. coverage	*5V* attachment with #9-15 Woodgrip or #12-8 Woodgrip XG screws with sealing washers spaced 6 in. o.c.	**-120**
5V-S-W-5	Min. 15/32 CDX plywood (Note 7a)	OPTIONAL *Approved* fire barrier	As required per FBC	Min. 26ga. steel, Grade 80 5V Crimp Max. 24 in. coverage	*5V* attachment with #12-8 Woodgrip XG screws with sealing washers spaced 9 in. o.c.	**-120**
5V-S-W-6	Min. 15/32 CDX plywood (Note 7a)	OPTIONAL *Approved* fire barrier	As required per FBC	Min. 26ga. steel, Grade 80 5V Crimp Max. 24 in. coverage	*5V* attachment with #9-15 Woodgrip or #12-8 Woodgrip XG screws with sealing washers spaced 6 in. o.c.	**-135**

Approved Systems for Min. 26ga. steel PBR over Wood Deck (New or Existing)						
System No.	Deck	Fire Barrier	Underlayment	**Roof Panel**	Panel Attachment	*MDP* (psf)
PBR-W-1	Min. 15/32 CDX plywood (Note 7a)	OPTIONAL *Approved* fire barrier	As required per FBC	Min. 26ga. steel, Grade 80 PBR Max. 36 in. coverage	*PBR* attachment with #12-8 Woodgrip XG screws with sealing washers spaced 24 in. o.c.	**-86**
PBR-W-2	Min. 15/32 CDX plywood (Note 7b)	OPTIONAL *Approved* fire barrier	As required per FBC	Min. 26ga. steel, Grade 80 PBR Max. 36 in. coverage	*PBR* attachment with #12-8 Woodgrip XG screws with sealing washers spaced 12 in. o.c.	**-153.5**

This evaluation report is provided for State of Florida product approval under Rule 61G20-3. The manufacturer shall notify CREEK Technical Services, LLC of any product changes or quality assurance changes throughout the duration for which this report is valid. This evaluation report does not express nor imply warranty, installation, recommended use, or other product attributes that are not specifically addressed herein.

Approved Systems for Min. 26ga. steel Ultra Rib over Wood Deck (New or Existing)						
System No.	Deck	Fire Barrier	Underlayment	Roof Panel	Panel Attachment	*MDP* (psf)
RIB-W-1	Min. 15/32 CDX plywood (Note 7a)	OPTIONAL *Approved* fire barrier	As required per FBC	Min. 26ga. steel Ultra Rib 36 in. coverage	*Ultra Rib* attachment with #12-8 Woodgrip XG screws with sealing washers spaced 24 in. o.c	**-116.25**
RIB-W-2	Min. 15/32 CDX plywood (Note 7a)	OPTIONAL *Approved* fire barrier	As required per FBC	Min. 26ga. steel Ultra Rib 36 in. coverage	*Ultra Rib* attachment with #9-15 Woodgrip screws with sealing washers spaced 12 in. o.c	**-135**

This evaluation report is provided for State of Florida product approval under Rule 61G20-3. The manufacturer shall notify CREEK Technical Services, LLC of any product changes or quality assurance changes throughout the duration for which this report is valid. This evaluation report does not express nor imply warranty, installation, recommended use, or other product attributes that are not specifically addressed herein.

DESIGN WIND LOADS

The following tables provide design wind loads for components and cladding in accordance with Section 1620 of the FBC and ASCE 7-22 under the following provisions:

1. Wind speeds for risk category I, II, III, and IV buildings shall be as defined in Section 1620 of the FBC.
2. Exposure C and D shall be as defined in section 1620 of the FBC.
3. Design wind load provided only for gable/hip roofs with roof slopes between 2:12 and 6.1:12.
4. All calculations are based on an effective wind area of 10-ft^2 or less.
5. Topographic factors such as escarpments or hills have been excluded from the analysis.
6. Overhangs have been excluded from the analysis.
7. Wind directionality factor, K_d = 0.85.
8. Ground elevation factor, K_e = 1.0.
9. Design wind loads are calculated using $P_{asd} = 0.6P_{ult}$.
10. Zone 2 applies to Zone 3 for Hip Roofs where the slope is between 2:12 and 6.1:12.
11. Projects with mean roof heights greater than 60-ft shall be evaluated by a licensed design professional.
12. Zones 1, 2, and 3 shall be defined as shown below. Dimension "a" shall be 10% of the least horizontal dimension or (0.4 x *Mean Roof Height)*, whichever is smaller, but not less than either 4% of the least horizontal dimension or 3ft.

Gable Roofs		Hip Roofs
Slopes 2:12 to 6.1:12	Slopes >6.1:12 to 12:12	Slopes 2:12 to 12:12
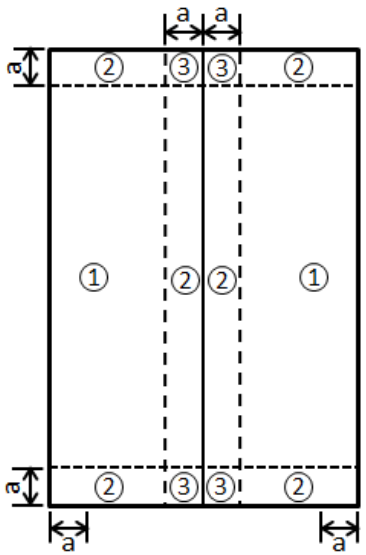	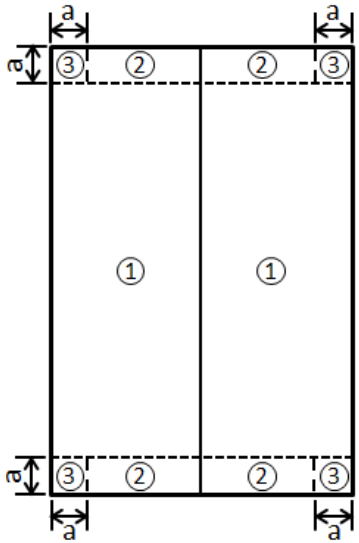	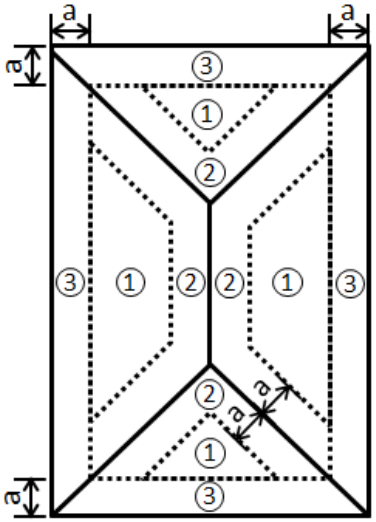

This evaluation report is provided for State of Florida product approval under Rule 61G20-3. The manufacturer shall notify CREEK Technical Services, LLC of any product changes or quality assurance changes throughout the duration for which this report is valid. This evaluation report does not express nor imply warranty, installation, recommended use, or other product attributes that are not specifically addressed herein.

Gable/Hip Roofs in **Exposure C in Miami-Dade & Broward County** (Roof slopes between 2:12 and 12:12)								
Building Type	Zone	Mean Roof Height (ft)	Basic Wind Speed (mph)					
			Risk Cat I	Risk Cat I	Risk Cat II	Risk Cat II	Risk Cat III, IV	Risk Cat III,IV
			156	165	170	175	180	186
Enclosed/ Partially Open	1	20	-62.3	-69.7	-74.0	-78.5	-83.0	-88.6
		25	-65.4	-73.2	-77.7	-82.3	-87.1	-93.0
		30	-67.9	-76.0	-80.7	-85.5	-90.4	-96.6
		40	-72.0	-80.6	-85.5	-90.6	-95.9	-102.4
		50	-75.4	-84.3	-89.5	-94.9	-100.4	-107.2
		60	-78.2	-87.5	-92.9	-98.5	-104.2	-111.2
	2	20	-82.4	-92.1	-97.8	-103.6	-109.6	-117.1
		25	-86.4	-96.7	-102.7	-108.8	-115.1	-122.9
		30	-89.7	-100.4	-106.6	-112.9	-119.5	-127.6
		40	-95.2	-106.4	-113.0	-119.7	-126.7	-135.3
		50	-99.6	-111.4	-118.3	-125.3	-132.6	-141.6
		60	-103.4	-115.6	-122.7	-130.1	-137.6	-146.9
	3	20	-108.1	-120.9	-128.4	-136.0	-143.9	-153.7
		25	-113.5	-126.9	-134.7	-142.8	-151.1	-161.3
		30	-117.8	-131.7	-139.8	-148.2	-156.8	-167.4
		40	-124.9	-139.7	-148.3	-157.2	-166.3	-177.5
		50	-130.7	-146.2	-155.2	-164.5	-174.0	-185.8
		60	-135.7	-151.8	-161.1	-170.7	-180.6	-192.9
Partially Enclosed	1	20	-72.9	-81.6	-86.6	-91.8	-97.1	-103.7
		25	-76.5	-85.6	-90.9	-96.3	-101.9	-108.8
		30	-79.4	-88.9	-94.3	-100.0	-105.8	-112.9
		40	-84.3	-94.3	-100.0	-106.0	-112.2	-119.8
		50	-88.2	-98.6	-104.7	-111.0	-117.4	-125.3
		60	-91.5	-102.4	-108.7	-115.2	-121.8	-130.1
	2	20	-92.9	-104.0	-110.4	-117.0	-123.7	-132.1
		25	-97.6	-109.1	-115.8	-122.8	-129.9	-138.7
		30	-101.3	-113.3	-120.2	-127.4	-134.8	-143.9
		40	-107.4	-120.1	-127.5	-135.1	-143.0	-152.6
		50	-112.4	-125.7	-133.5	-141.4	-149.6	-159.8
		60	-116.6	-130.5	-138.5	-146.8	-155.3	-165.8
	3	20	-118.7	-132.8	-140.9	-149.3	-158.0	-168.7
		25	-124.6	-139.4	-147.9	-156.8	-165.8	-177.1
		30	-129.3	-144.6	-153.5	-162.7	-172.1	-183.8
		40	-137.1	-153.4	-162.8	-172.5	-182.5	-194.9
		50	-143.5	-160.5	-170.4	-180.6	-191.0	-204.0
		60	-148.9	-166.6	-176.9	-187.4	-198.3	-211.7

This evaluation report is provided for State of Florida product approval under Rule 61G20-3. The manufacturer shall notify CREEK Technical Services, LLC of any product changes or quality assurance changes throughout the duration for which this report is valid. This evaluation report does not express nor imply warranty, installation, recommended use, or other product attributes that are not specifically addressed herein.

APPENDIX C

Gable/Hip Roofs in **Exposure D in Miami-Dade & Broward County** (Roof slopes between 2:12 and 12:12)								
Building Type	Zone	Mean Roof Height (ft)	Basic Wind Speed (mph)					
			Risk Cat I	Risk Cat I	Risk Cat II	Risk Cat II	Risk Cat III, IV	Risk Cat III,IV
			156	165	170	175	180	186
Enclosed/ Partially Open	1	20	-75.5	-84.5	-89.7	-95.0	-100.5	-107.3
		25	-78.4	-87.7	-93.1	-98.6	-104.3	-111.4
		30	-80.9	-90.5	-96.1	-101.8	-107.7	-115.0
		40	-85.0	-95.1	-101.0	-107.0	-113.2	-120.9
		50	-88.4	-98.9	-105.0	-111.2	-117.7	-125.7
		60	-91.2	-102.1	-108.4	-114.8	-121.5	-129.7
	2	20	-99.7	-111.6	-118.5	-125.5	-132.8	-141.8
		25	-103.5	-115.8	-122.9	-130.3	-137.8	-147.2
		30	-106.9	-119.5	-126.9	-134.5	-142.3	-151.9
		40	-112.3	-125.7	-133.4	-141.4	-149.6	-159.7
		50	-116.8	-130.6	-138.7	-147.0	-155.5	-166.0
		60	-120.5	-134.8	-143.1	-151.7	-160.5	-171.4
	3	20	-130.9	-146.5	-155.5	-164.7	-174.3	-186.1
		25	-135.9	-152.0	-161.3	-171.0	-180.9	-193.1
		30	-140.2	-156.9	-166.5	-176.5	-186.7	-199.4
		40	-147.4	-164.9	-175.1	-185.5	-196.3	-209.6
		50	-153.3	-171.5	-182.0	-192.9	-204.1	-217.9
		60	-158.2	-177.0	-187.9	-199.1	-210.6	-224.9
Partially Enclosed	1	20	-88.3	-98.8	-104.9	-111.1	-117.6	-125.5
		25	-91.7	-102.5	-108.8	-115.3	-122.0	-130.3
		30	-94.6	-105.8	-112.3	-119.1	-126.0	-134.5
		40	-99.5	-111.3	-118.1	-125.2	-132.4	-141.4
		50	-103.4	-115.7	-122.8	-130.1	-137.7	-147.0
		60	-106.7	-119.4	-126.7	-134.3	-142.1	-151.7
	2	20	-112.6	-125.9	-133.7	-141.6	-149.9	-160.0
		25	-116.8	-130.7	-138.7	-147.0	-155.5	-166.1
		30	-120.6	-134.9	-143.2	-151.7	-160.5	-171.4
		40	-126.8	-141.8	-150.5	-159.5	-168.8	-180.2
		50	-131.8	-147.4	-156.5	-165.8	-175.4	-187.3
		60	-136.0	-152.2	-161.5	-171.2	-181.1	-193.4
	3	20	-143.7	-160.8	-170.7	-180.9	-191.4	-204.3
		25	-149.2	-166.9	-177.1	-187.7	-198.6	-212.1
		30	-154.0	-172.2	-182.8	-193.8	-205.0	-218.9
		40	-161.9	-181.1	-192.2	-203.7	-215.5	-230.1
		50	-168.3	-188.2	-199.8	-211.8	-224.0	-239.2
		60	-173.7	-194.3	-206.3	-218.6	-231.2	-246.9

This evaluation report is provided for State of Florida product approval under Rule 61G20-3. The manufacturer shall notify CREEK Technical Services, LLC of any product changes or quality assurance changes throughout the duration for which this report is valid. This evaluation report does not express nor imply warranty, installation, recommended use, or other product attributes that are not specifically addressed herein.